TECHNICAL DATA

SINGLE DRUM ROLLERS

BW 211 D-5 SL, BW 211 PD-5 SL

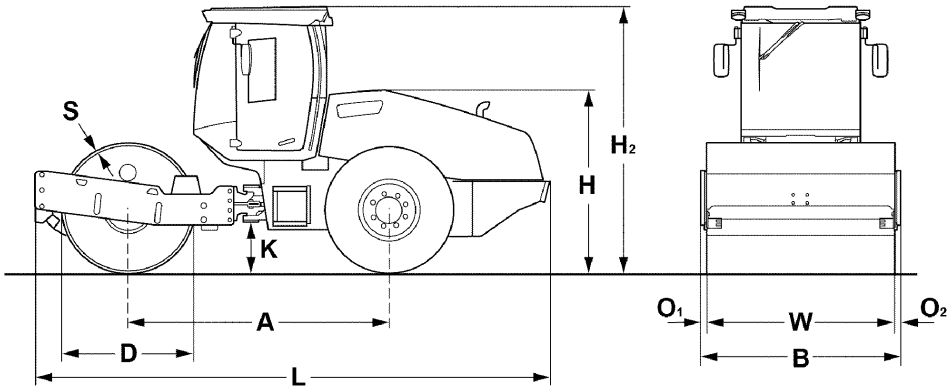

Dimensions in mm

	A	B	D	H	H2	K	L	O1	O2	S	W
BW 211 D-5 SL	2975	2260	1500	2240	3053	530	5870	65	65	25	2130
BW 211 PD-5 SL	2975	2260	1480	2240	3053	530	5870	65	65	25	2130

Shipping dimensions in m3	without ROPS	with ROPS
BW 211 D-5 SL	29,716	40,502
BW 211 PD-5 SL	29,716	40,502

Machine type	Compaction output (m3/h)			
	Rock fill	**Gravel, sand**	**Mixed soil**	**Silt, clay**
BW 211 D-5 SL	400-800	270-540	220-440	110-220
BW 211 PD-5 SL	400-800	270-540	220-440	160-220

Machine type	Compacted layer thickness (m)			
	Rock fill	**Gravel, sand**	**Mixed soil**	**Silt, clay**
BW 211 D-5 SL	0,70	0,50	0,40	0,20
BW 211 PD-5 SL	0,70	0,50	0,40	0,25

Technical Data		BOMAG BW 211 D-5 SL	BOMAG BW 211 PD-5 SL
Weights			
Grossweight	kg	13.290	12.330
Operating weight	kg	10.120	11.670
Operating weight CECE w. ROPS-cabin	kg	10.630	12.180
Axle load, drum CECE	kg	6.040	7.590
Axle load, wheels CECE	kg	4.590	4.590
Static linear load CECE	kg/cm	28,4	
Dimensions			
Working width	mm	2.130	2.130
Track radius, inner	mm	3.677	3.677
Driving Characteristics			
Speed (1)	km/h	0- 6,0	0- 6,0
Speed (2)	km/h	0- 10,0	0- 11,5
Max. gradeability without/with vibr.	%	45/43	45/43
Drive			
Engine manufacturer		Deutz	Deutz
Engine type		BF4M 2012 C	BF4M 2012 C
Emission stage		Stage II / TIER2	Stage II / TIER2
Cooling		Liquid	Liquid
Number of cylinders		4	4
Performance ISO 3046	kW	98,0	98,0
Performance SAE J 1995	hp	132,0	132,0
Speed	min-1	2.300	2.300
Fuel		Diesel	Diesel
Electric equipment	V	12	12
Drive system		hydrost.	hydrost.
Drum driven		standard	standard
Drums and Tyres			
Number of pad feet			150
Area of one pad foot	cm2		137
Height of pad feet	mm		100
Tyre size		23.1-26/12PR	23.1-26/12PR
Brakes			
Service brake		hydrost.	hydrost.
Parking brake		hydromec.	hydromec.
Steering			
Steering system		oscil.artic.	oscil.artic.
Steering method		hydrost.	hydrost.
Steering / oscillating angle +/-	grad	35/12	35/12
Exciter system			
Drive system		hydrost.	hydrost.
Frequency	Hz	30/36	30/36
Amplitude	mm	1,80/0,95	1,70/0,86
Centrifugal force	kN	236/170	275/202
Centrifugal force	t	24,1/17,3	28,1/20,6
Capacities			
Fuel	l	250,0	250,0

Technical modifications reserved. Machines may be shown with options.

Standard Equipment

- ☑ Self locking differential
- ☑ Rear axle with twin spring accumulator brakes
- ☑ Hydrostatic travel and vibration drive
- ☑ Hydrostatic articulated steering
- ☑ Articulated joint lock
- ☑ Battery disconnect switch
- ☑ Single lever control for travel and vibration
- ☑ Warning, information and operation displays with LCD
- ☑ Emergency STOP
- ☑ Back-up alarm
- ☑ 1 Scraper
- ☑ Operator seat
- ☑ Warning horn
- ☑ BOMAG TELEMATIC

Optional Equipment

- ☐ ROPS/FOPS cabin with seat belts
- ☐ ROPS/FOPS with safety belt
- ☐ Air condition
- ☐ Rotary beacon
- ☐ Indicator and hazard lights
- ☐ ECONOMIZER
- ☐ TERRAMETER
- ☐ Fleet Management Access
- ☐ Padfoot segment kit (D)
- ☐ Measuring- and machine data interface
- ☐ Comfort driver's seat
- ☐ Contact scrapers (2x)
- ☐ Sun roof
- ☐ Increased amplitude
- ☐ Tablet holder set
- ☐ BOMAP GPS antenna set
- ☐ BOMAP GPS antenna holder
- ☐ 360° Camera system
- ☐ Hydraulic guard plate
- ☐ Cab guard plate
- ☐ Fire extinguisher (D)
- ☐ Rearview camera
- ☐ Tractor tires (D)
- ☐ Radio (DAB)
- ☐ Dust protection for electrical box
- ☐ ECOSTOP
- ☐ Railing
- ☐ Vandalism protection
- ☐ LED working lights
- ☐ JOBLINK measuring technology interface

BOMAG
Hellerwald
D-56154 Boppard
P.O. Box 5162
Tel. (0)6742 - 1000
Fax (0)6742 - 3090